Data sheet

DST0-QHEA-GB0 SPLIT / 05.09.2016 - V 1.1

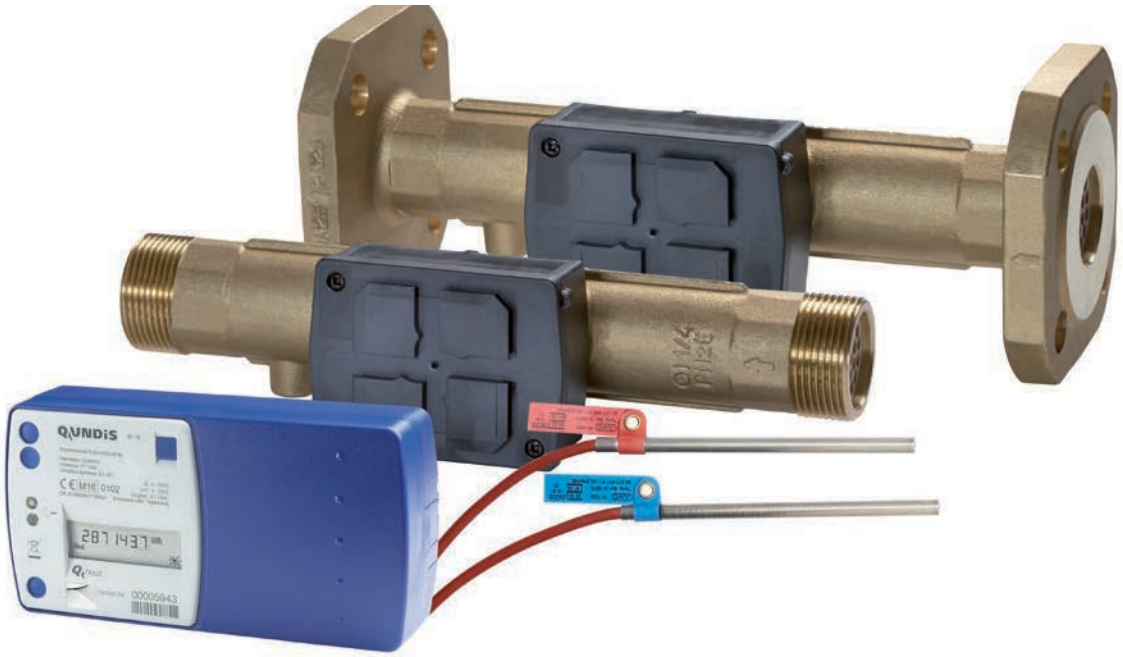

Q heat split heat meter

MID-conform split heat meter with different ultrasonic and Woltman flow sensors. Available in numerous sizes from qp 0.6 m³/h to qp 60 m³/h, Fitted with an optical interface for retrofitting to external add-on modules.

Thanks to integrated modules, the calculator unit can be equipped with the required communication technology ex factory.

For use in the **Q opto** and **Q basic** systems or optionally through an integrated communication module in the **Q M-Bus** system. Can be retrofitted with external modules for use in the systems **Q M-Bus**, **Q walk-by** and **Q AMR**.

As series G 13 / G 14 with combined heat and cold metering, and as series G 18 / G 19 with solar metering.

Application

Split heat meters G 03 / G 04 are used for measuring heat energy. The G 13 / G 14 allows combined measurement of heat and cold energy, the G 18 / G 19 makes the measurement of solar energy possible.

Split heat meters are used wherever compact heat meters cannot be installed. This applies particularly to unfavourable installation positions, high temperature loads or large volume flows.

Typical users are:

- Metering service companies
- Housing associations
- Property management companies
- Specialist companies for sanitary, heating and air-conditioning technology

General description

The split heat meters G 03 - G 19 are made up of the calculator unit R 20 / R 21 / R 28, a pair of precise temperature sensors and a flow sensor which is installed in a hot water or cooling circuit. The electronic calculator unit calculates the difference in temperature between the supply and return flow and multiplies the value by the flow rate. The result of this (current heating or cooling capacity) is cumulated, displayed or forwarded to a data-processing system wirelessly or by cable.
The calculator unit of the split heat meter can be extended using different internal and external modules. Internal modules are installed in the device during production in the factory.

The calculator unit R 20 / R 21 / R 28 has two communication interfaces. The optical interface Q opto (1107) which is accessible from the outside. This allows programming and retrofitting work on the R 20 / R 21 / R 28 on-site at all times. The calculator unit can be retrofitted for wireless or other communication methods. The respective modules are mounted on the calculator unit.

The internal module interface for internal impulse output or M-Bus modules. In the case of integrated modules, the information is forwarded via a permanently mounted, threaded and sealed cable connection (impulse output and M-Bus).

Storing the consumption values

Using the measured difference in temperature between supply and return flow, the flow rate and the calculated thermal coefficient, the heat quantity is shown on the LC display in physical units (kWh, MWh, MJ, GJ) following an internal calculation process.

To increase measuring accuracy, the density and enthalpy values are determined for every measurement and integrated into the calculation.

Storing the consumption values

The heat consumption values are continually cumulated. The current status is stored at 24.00 h on the due date.

The due date can be set with the aid of a programming key; December 31 is the default setting.

When the annual consumption is stored, the heat meter calculates a plausibility figure. This can be read out together with the due date value and checked in the billing program. This allows incorrect display readouts (e.g. “switched digits”) to be detected. The stored due date value remains in place for one year.

Calculator unit

- MID-conform calculator unit (only for measuring heat)
- Temperature sensor connection using 2- and 4-conductor technology
- Optical interface for external communication modules
- Internal communication modules for M-Bus and impulse available ex factory
- Mains-independent, for local use, 6 or 10-year lithium battery
- High resolution thanks to 7-digit LC display that indicates current value, old value, check number and many service and operating parameters
- Additional display of 18 monthly values with date
- Programming of a due date can be carried out on-site via the optical interface
- Add-on modules for M-Bus communication as well as impulse output modules can be retrofitted at any time on-site via the optical interface
- The readout processes are made easier and optimised in terms of error detection and secure data transmission
- Very high measuring accuracy
- Clear pictograms and large numbers allow meter reading to be carried out quickly and easily

Flow sensors

- Variants from 0.6 to 250 m³/h
- Ultrasonic sensors for installation in any position
- Dynamic ratio 1:100
- Safety and precise measurement
- Permissible operating temperature 120 °C
- Numerous measuring ranges available for ultrasonic measurement
- For flanged or threaded connection
- Different impulse values
- MID-confirm

Temperature sensor

- 2-conductor technology
- Short response time
- Silicone cable resistant to high temperatures available in different lengths
- Measuring range from 0 to 120 °C
- Deviations smaller than 0.05 °C
- MID-confirm

Split heat meter installation example

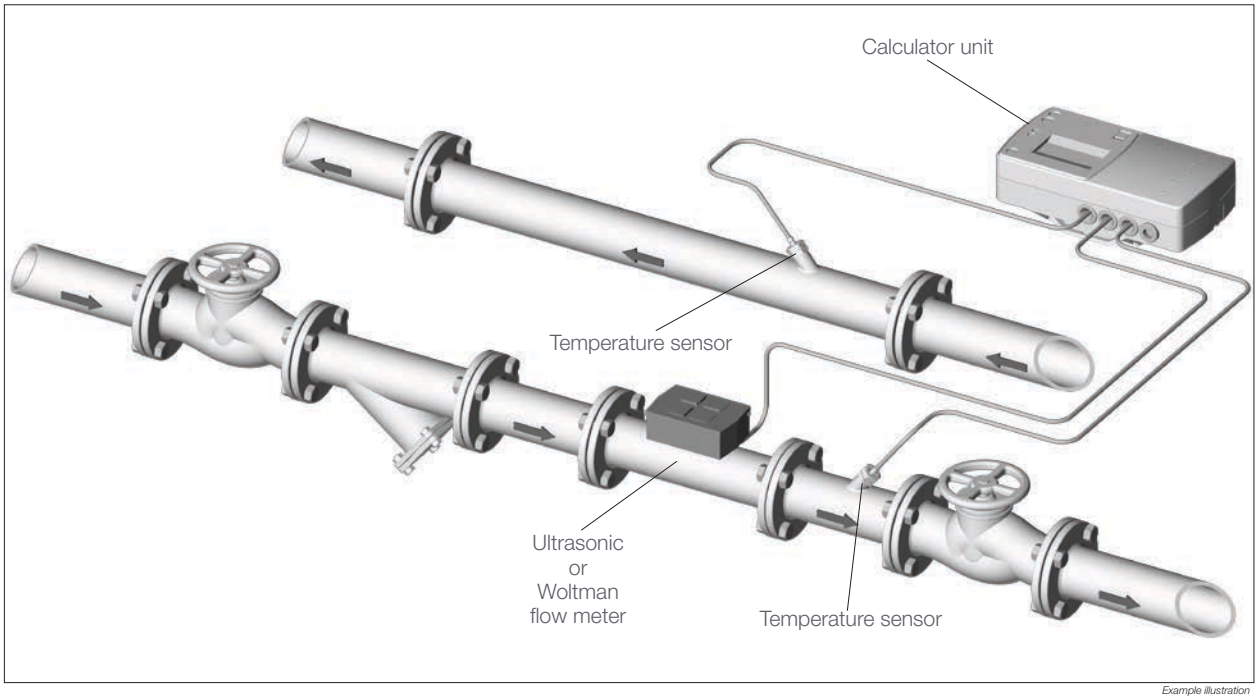

Example illustration

Display

Device states, display units and consumption values are shown via the LC display on several levels (up to 4 levels). The heat meter is equipped with a key that can be used to switch between the individual display steps and levels.

The meter display is switched off and is only activated after a key has been pressed.

The display includes the following values

- Current heat quantity / G 13 / G 14 cold quantity
- Display test
- Old value heat quantity / G 13 / G 14 cold quantity
- Check sum heat quantity / G 13 / G 14 cold quantity
- Due date
- Cumulated volume
- Current flow
- Supply flow temperature
- Return flow temperature
- Temperature difference
- Current energy flow
- Operating hours
- High-resolution heat quantity
- Volume per input impulse
- Software status
- Any module installed
- Save date and consumption values for the last 18 months for heat quantity / G 13 / G 14 cold quantity

Operating scheme

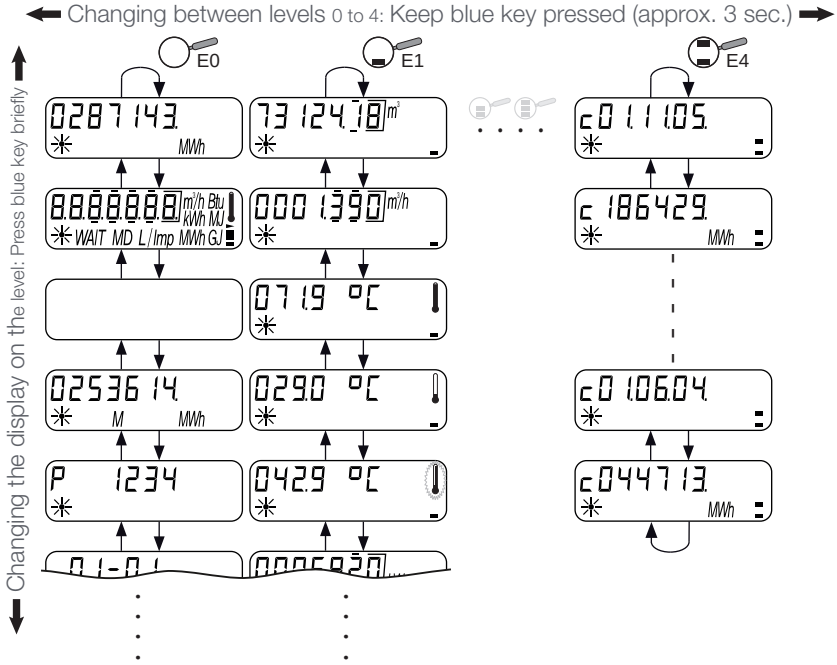

Key for changing between the display levels and moving within the levels

Overview of display levels

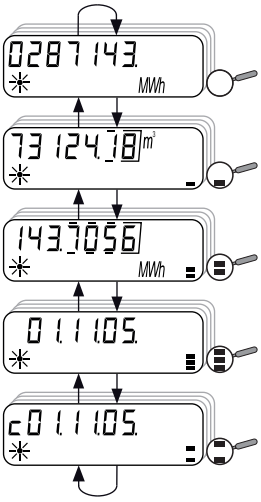

Display level 0
Current information

Display level 1
Current values

Display level 2
Parameter

Display level 3
Monthly values heat measurement

Display level 4
Monthly values cold measurement

Standard display elements

All segments on
All segments are displayed – display test

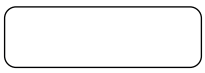

All segments off
Normal silent operation of the heat meter

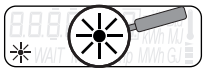

Impulses (animated)
Flow impulses are being received by the hydraulic sensor.

Wait
Displayed during increased access to the optical interface
- Battery under too much load!

Further communication not possible until after date change

Temperature
Thermometer indicates temperature information
- High column - hot pipe
- Low column - cold pipe
- Flashing column - temperature difference

No energy
No energy is being recorded
(No flow and/or now temperature difference)

Display or device level indicator
- Level 0 = no bars
- Level 1 = 1 bar
- Level 2 = 2 bars
- Level 3 = 3 bars
- Level 4 = top and bottom bars shown, centre empty

Flashing elements
Flashing of the fine lines: Programming mode
Press blue key: Program / edit

Display function control

Display test (all segments on)
Check whether all the segments in the adjacent display light up.

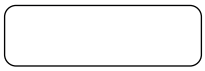

Display test (all segments off)
Check whether all the segments are off.

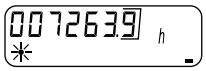

Operating hours
If the operating hour display approximately correlates with the service life of the device (see year of manufacture), the device voltage supply is OK.
NOTE: The hours counter runs from the moment the battery is installed in the factory.

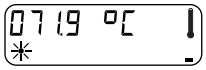

Temperature in the hot pipe
Use a thermometer to determine the actual current temperature in the heating system and compare the result with the display.

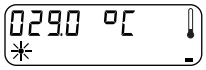

Temperature in the cold pipe
Use a thermometer to determine the actual current temperature in the heating system and compare the result with the display.

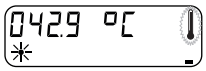

Temperature difference
Calculate the difference in temperature between the temperature measured in the hot and cold pipes and compare the result once again with the display.

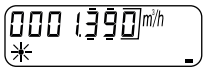

Current flow
In order to evaluate the current functional ability of the heat meter, open the display showing the current device flow.

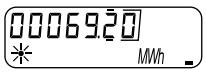

Current energy flow calculation
Current flow [m³/h] x Temperature difference [K] x 1.2
The value calculated should correlate approximately with the display.

Ultrasonic series 473 (threaded connection)

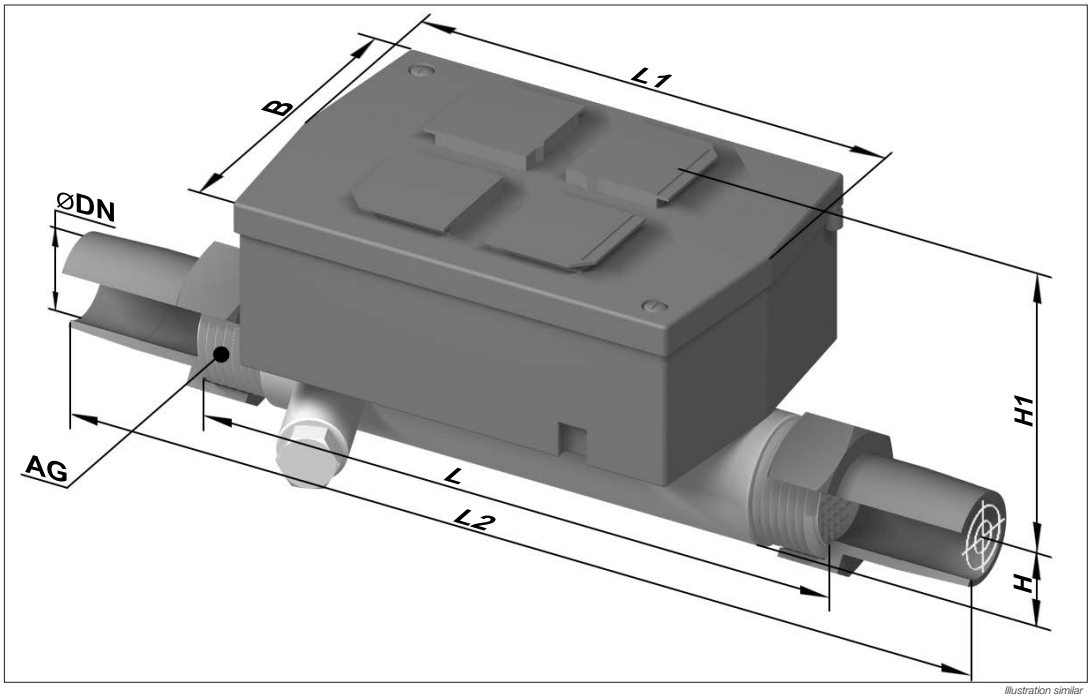

Illustration similar

Technical data

Series			473												
Nominal width	DN	mm	15	20	20	15	20	20	20	20	25	25	32	25	32
Nominal flow	qp	m³/h	0.6	0.6	0.6	1.5	1.5	1.5	2.5	2.5	3.5	3.5	3.5	3.5	3.5
Approval			Approval according to MID												
Design length	L	mm	110	130	190	110	130	190	130	190	135	150	150	260	260
Design length with screw fitting	L2	mm	190	230	-	190	230	-	230	-	255	270	270	380	380
Maximum flow	qs	m³/h	1.2	1.2	1.2	3	3	3	5	5	7	7	7	7	7
Minimum flow (DR 1:250)	qi	l/h	6	6	6	6	6	6	10	10	-	-	-	-	-
Minimum flow (DR 1:100)	qi	l/h	6	6	6	15	15	15	25	25	35	35	35	35	35
Minimum flow for upside down installation	qi	l/h	6	6	6	6	6	6	10	10	35	35	35	35	35
Pressure loss at qp	Δp	mbar	85	85	85	75	75	75	100	100	44	44	44	44	44
Start-up value		l/h	1	1	1	2.5	2.5	2.5	4	4	7	7	7	7	7
Connection thread Meter		Inch-es	G¾B	G1B	G1B	G¾B	G1B	G1B	G1B	G1B	G1¼B	G1¼B	G1½B	G1¼B	G1½B
Connection thread Screw fitting		Inch-es	R½	R¾	R¾	R½	R¾	R¾	R¾	R¾	R1	R1	R1¼	R1	R1¼
Height	H H1	mm mm	14.5 54.5	18 56.5	18 56.5	14.5 54.5	18 56.5	18 56.5	18 56.5	18 56.5	23 61	23 61	23 61	23 61	23 61
Length of electronics	L1	mm	90	90	90	90	90	90	90	90	90	90	90	90	90
Width of electronics	B	mm	65.5	65.5	65.5	65.5	65.5	65.5	65.5	65.5	65.5	65.5	65.5	65.5	65.5
Weight		kg	0.6	0.61	0.63	0.60	0.61	0.63	0.61	0.63	0.88	0.93	1.08	1.35	1.35
Length of impulse cable		cm	250												

Minor changes can occur as a result of technical development.

See the next page for further nominal sizes of the 473 series with threaded connection:

Ultrasonic series 473 (threaded connection)

Pressure loss curve

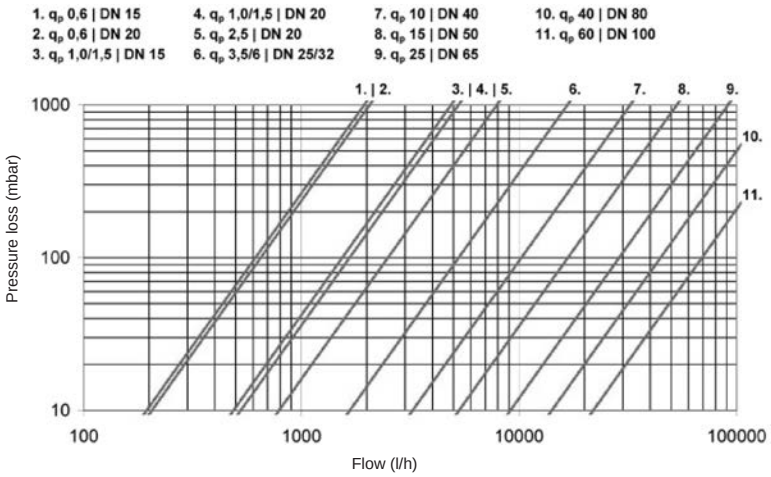

Series			473										
Nominal width	DN	mm	25	25	32	25	32	40	40	50	65	80	100
Nominal flow	qp	m³/h	6	6	6	6	6	10	10	15	25	40	60
Approval			Approval according to MID										
Design length	L	mm	135	150	150	260	260	200	300	270	300	300	360
Design length with screw fitting	L2	mm	225	270	270	380	380	340	440	-	-	-	-
Maximum flow	qs	m³/h	12	12	12	12	12	20	20	30	50	80	120
Minimum flow (DR 1:250)	qi	l/h	24	24	24	24	24	40(2)	40(2)	60(2)	100(2)	160(2)	240(2)
Minimum flow (DR 1:100)	qi	l/h	60	60	60	60	60	100	100	150	250	400	600
Minimum flow for upside down installation	qi	l/h	24	24	24	24	24	100	100	150	250	160	1200
Pressure loss at qp	Δp	mbar	128	128	128	128	128	95	95	80	75	80	75
Start-up value		l/h	7	7	7	7	7	20	20	40	50	80	120
Connection thread Meter		Inch-es	G1¼B	G1¼B	G1½B	G1¼B	G1½B	G2B	G2B	-	-	-	-
Connection thread Screw fitting		Inch-es	R1	R1	R1¼	R1	R1¼	R1½	R1½	-	-	-	-
Height	H H1	mm mm	23 61	23 61	23 61	23 61	23 61	33 66.5	33 66.5	- -	- -	- -	- -
Length of electronics	L1	mm	90	90	90	90	90	90	90	-	-	-	-
Width of electronics	B	mm	65.5	65.5	65.5	65.5	65.5	65.5	65.5	-	-	-	-
Weight		kg	0.88	0.93	1.08	1.35	1.35	2.4	2.6	-	-	-	-
Length of impulse cable		cm	250										

(2) Only in horizontal installation position

See the previous page for further nominal sizes of the 473 series with threaded connection:

Ultrasonic series 473 (flanged connection)

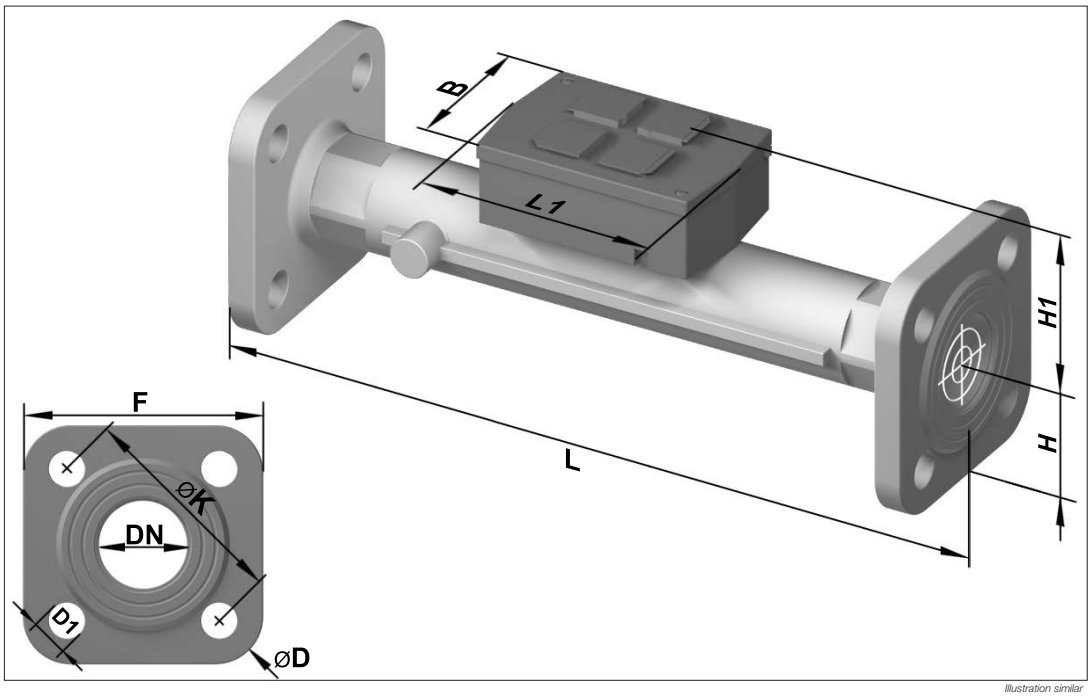

Illustration similar

Technical data

Series														
Nominal width	DN	mm	20	20	20	25	32	25	32	40	50	65	80	100
Nominal flow	qp	m³/h	0.6	1.5	2.5	3.5	3.5	6	6	10	15	25	40	60
Approval			Approval according to MID											
Design length	L	mm	190	190	190	260	260	260	260	300	270	300	300	360
Height	H H1	mm mm	47.5 56.5	47.5 56.5	47.5 56.5	50 61	62.5 61	50 61	62.5 61	69 66.5	73.5 71.5	85 79	92.5 86.5	108 96.5
Flange dimensions	F	mm	95	95	95	100	125	100	125	138	147	170	185	216
Flange diameter	D	mm	105	105	105	114	139	114	139	148	163	184	200	235
Diameter of hole circle	K	mm	75	75	75	85	100	85	100	110	125	145	160	180(1)/190
Diameter	D1	mm	14	14	14	14	18	14	18	18	18	18	19	19(1)/22
Number of flange bore holes		quan-tity	4	4	4	4	4	4	4	4	4	8	8	8
Length of electronics	L1	mm	90	90	90	90	90	90	90	90	90	90	90	90
Width of electronics	B	mm	65.5	65.5	65.5	65.5	65.5	65.5	65.5	65.5	65.5	65.5	65.5	65.5
Weight of brass housing(2)		kg	2.7	2.7	2.7	3.35	4.65	3.35	4.65	6.6	7.45	9.45	11.1	16.9
Weight of cast iron housing(2)		kg	-	-	-	-	-	-	-	-	6.31	8.08	10.01	15.76
Length of impulse cable		cm	250											

Minor changes can occur as a result of technical development.
(1) Values for PN 16 housing
(2) Meter with battery and impulse cable 2.4 m long

Pressure loss curve

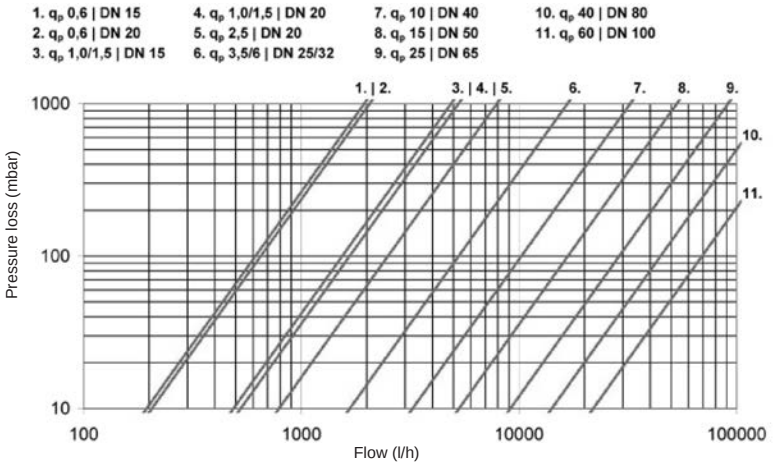

Woltman WS - series 453

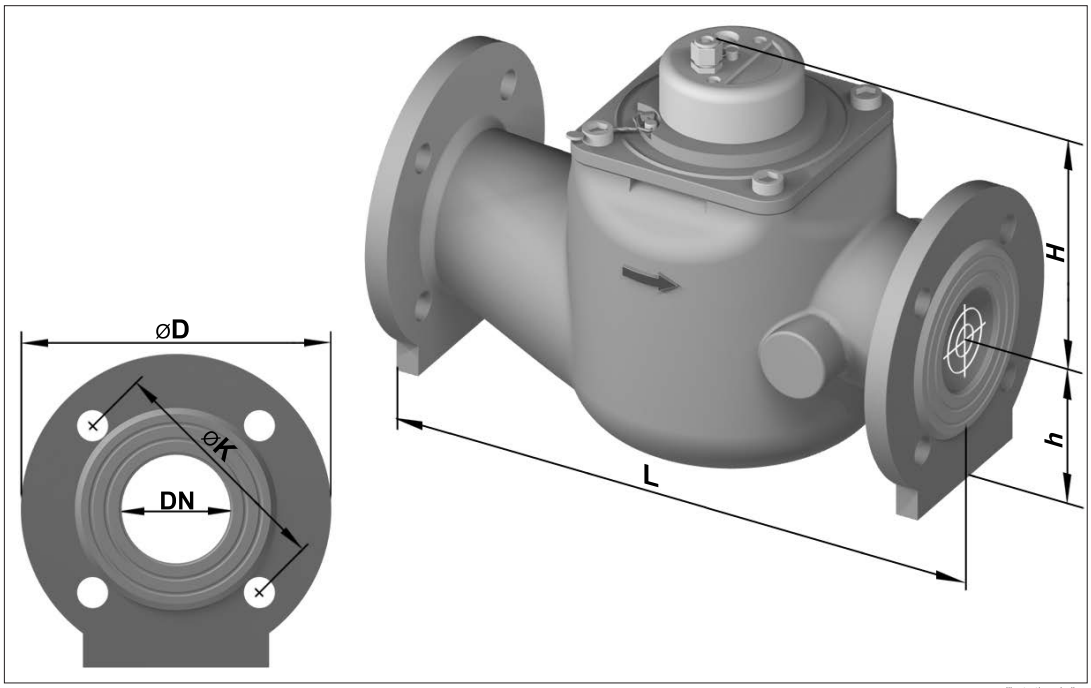

Illustration similar

Technical data

Series				453			
Design				WS-XKA			
Nominal width		DN	mm	50	65	80	100
Nominal flow		Qn	m³/h	15	25	40	60
Approval				Approval according to MID			
Impulse value			l/imp.	100	100	100	100
Flow at 0.1 bar pressure loss			m³/h	19	21	42	70
Maximum flow (briefly)		Qmax	m³/h	50	50	110	140
Lower measuring range limit		Qmin	m³/h	0.2	0.2	0.3	0.4
Start-up values			l/h	60	60	90	90
Flange connection dimensions acc. to DIN 2501/PN 16	Outer dia.	D	mm	165	185	200	220
	Hole circle dia.	K	mm	125	145	160	180
	Number of screws	quantity		4	4	8	8
Height	without increase due to calculator unit	H	mm	155	155	190	200
	with increase due to calculator unit	H	mm	195	195	230	240
		h	mm	84	97	102	113
Length acc. to DIN 19626		L	mm	270	300	300	360
Length acc. to DIN ISO 4064		L	mm	300	300	350	350
Weight			kg	14.2	18	24	28
Installation position: - horizontal							

Minor changes can occur as a result of technical development.

Pressure loss curve

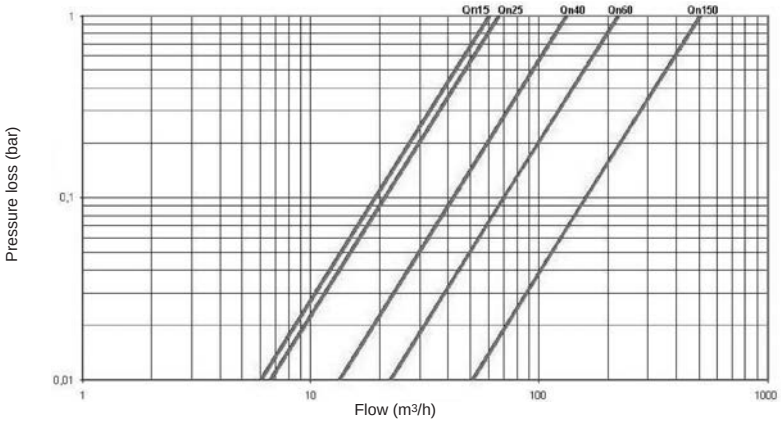

Woltman WP - series 457

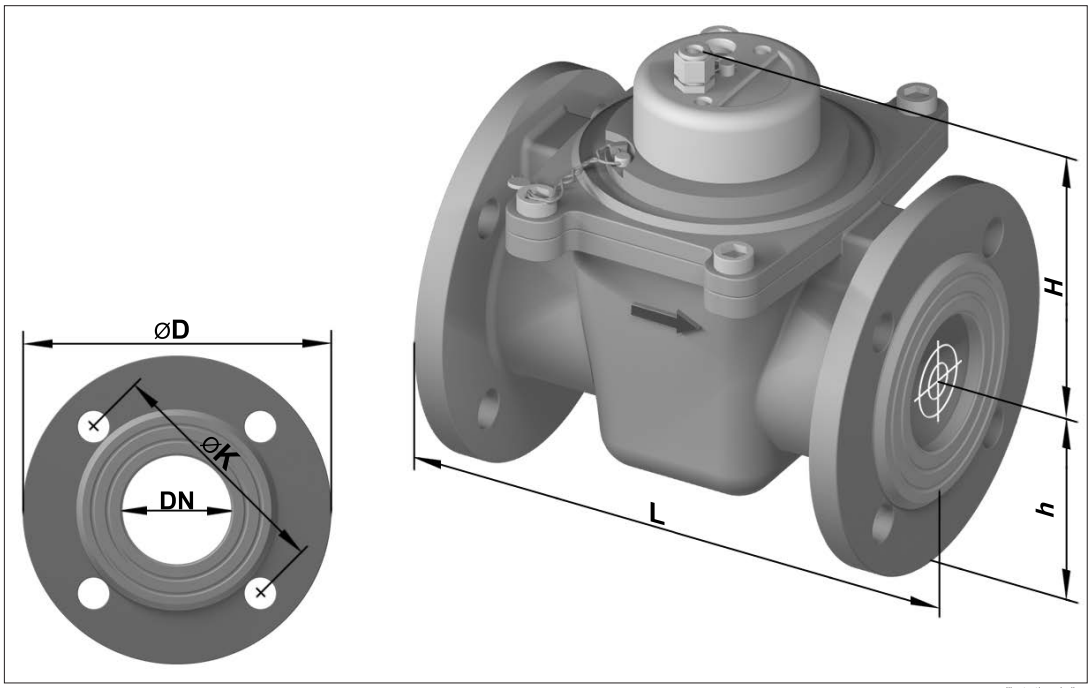

Illustration similar

Technical data

Series				457				
Design				WP-XKA PH-XKA				
Nominal width		DN	mm	50	65	80	150	200
Nominal flow		Qn	m³/h	15	25	32	150	250
Approval				Approval according to MID				
Impulse value			l/imp.	100	100	100	100	100
Maximum flow (briefly+factory specifications)		Qmax	m³/h	30	30	45	300	500
Lower measuring range limit		Qmin	m³/h	0.55	0.55	2.5	4.5	8
Start-up values			l/h	130	130	400	1700	200
Flange connection dimensions acc. to DIN 2501/PN 16	Outer dia.	D	mm	165	185	200	285	340
	Hole circle dia.	K	mm	125	145	160	240	295
	Number of screws	quantity		4	4	8	8	8/12
Height		H h	mm mm	141 75	141 82.5	141 94	244 135	244 163
Length acc. to DIN 19626		L	mm	200	200	200/225	300	350
Weight			kg	11.1	11.6	12.5	39	47
Installation positions: - horizontal - vertical								

Minor changes can occur as a result of technical development.

Pressure loss curve

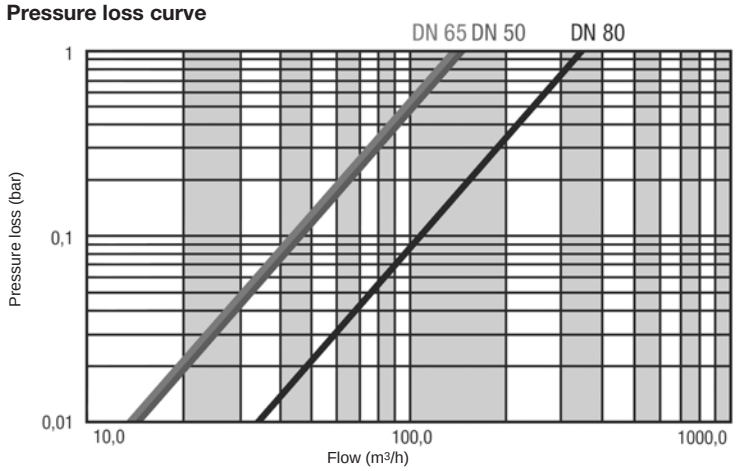

Woltman WP - series 456

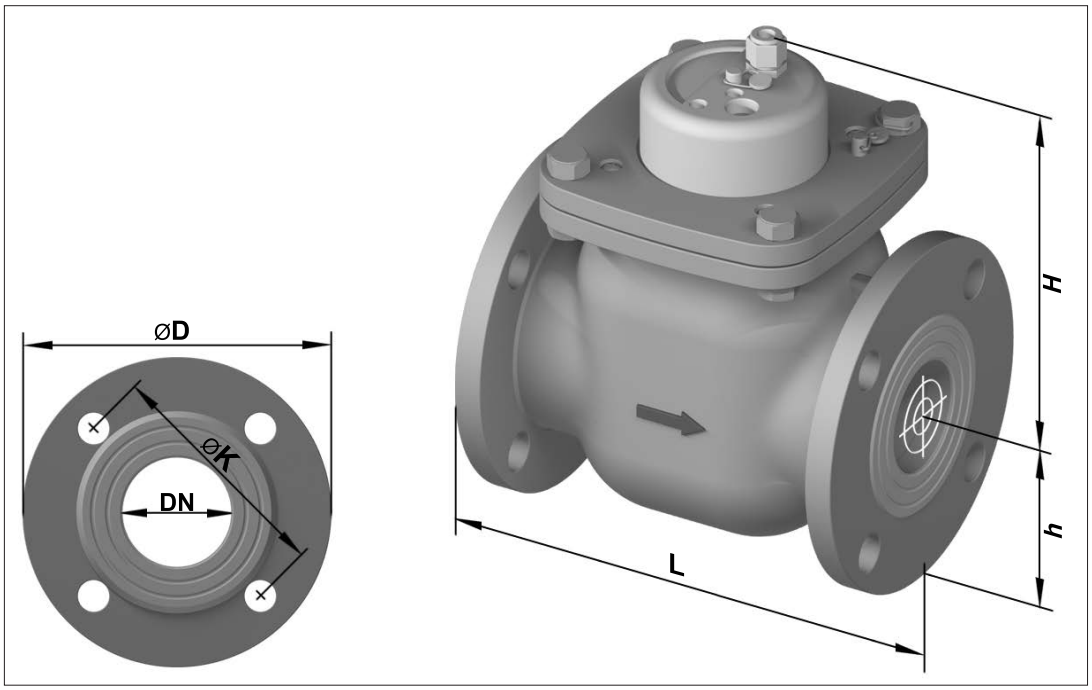

Illustration similar

Technical data

Series				456	
Design				WP-XKA	PH-XKA
Nominal width		DN	mm	100	125
Nominal flow		Qn	m³/h	60	100
Approval				Approval according to MID	
Impulse value			l/imp.	100	100
Maximum flow (briefly+factory specifications)		Qmax	m³/h	180	250
Flow at 1 bar pressure loss			m³/h	95	200
Lower measuring range limit		Qmin	m³/h	2	3
Start-up values			l/h	500	800
Flange connection dimensions acc. to DIN 2501/PN 16	Outer dia.	D	mm	220	250
	Hole circle dia.	K	mm	180	210
	Number of screws	quantity		8	8
Height		H h	mm mm	200 110	200 125
Length acc. to DIN 19626		L	mm	250	250
Weight			kg	19.8	22.4
Installation positions: - horizontal - vertical					

Minor changes can occur as a result of technical development.

Pressure loss curve

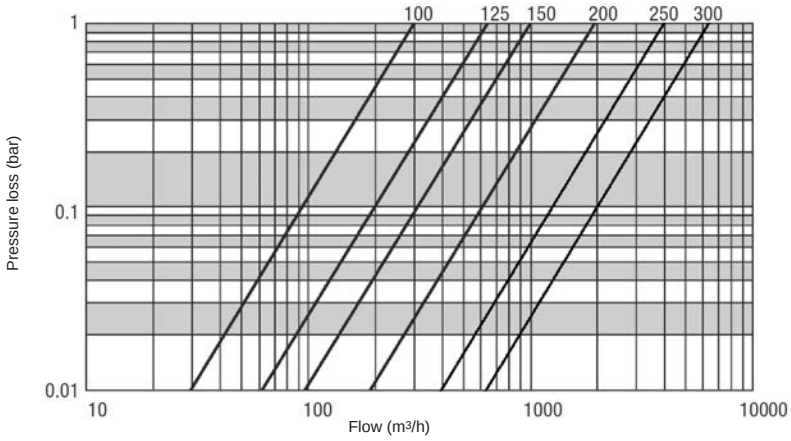

Technical data of calculator unit

Device type	R 20 (heat)	R 21 (heat + cold [1])	R 28 (solar [2])
Permissible temperature range	5 - 120 °C	5 - 120 °C	5 - 120 °C
Permissible temperature difference	3 - 150 K	3 - 150 K	3 - 150 K

Type of temperature sensor	Type/connection type	Type/connection type	Type/connection type
Standard temperature sensor Connection type	PT 1000 2-conductor technology	PT 1000 2-conductor technology	PT 1000 2-conductor technology
Optional temperature sensor Connection type	PT 100 / PT 500 4-conductor technology	PT 100 / PT 500 4-conductor technology	PT 100 / PT 500 4-conductor technology
Temperature difference heat metering	1 K [3]	1 K [3]	1 K [3]
Temperature difference cold metering	-.-	0.2 K [3]	-.-
Max. cable length, unshielded	10 m	10 m	10 m

Power supply	Lithium battery	Lithium battery	Lithium battery
Battery service life	> 6 (opt. 10) years	> 6 (opt. 10) years	> 6 (opt. 10) years
Protection rating	IP 65	IP 65	IP 65
Operating temperature	5 - 55 °C	5 - 55 °C	5 - 55 °C
Environment class acc. to EN 1434-4	C (industrial)	C (industrial)	C (industrial)

Connection flow impulse generator		Suitable for open collector and Reed contact		
Max. cable length		10 m	10 m	10 m
Impulse value		0.1 ml - 999,999.9 ml per impulse		
Max. impulse frequency	< 1 l/imp.	166 Hz	166 Hz	166 Hz
Max. impulse frequency	=/> 1 l/imp.	20 Hz	20 Hz	20 Hz

Display		7-digit LCD	7-digit LCD	7-digit LCD
Display levels		4 / 5	4 / 5	4 / 5
Standard energy display	</=2.5 m^3/h	MWh	MWh	MWh
	>2.5 m^3/h	MWh	MWh	MWh
Optional energy display	</=2.5 m^3/h	kWh, MJ, GJ	kWh, MJ, GJ	kWh, MJ, GJ
	>2.5 m^3/h	GJ	GJ	GJ
Registering range		-30 °C - +190 °C	-30 °C - +190 °C	-30 °C - +190 °C

Housing	Impact-resistant polymer
Installation	Installation on DIN rail (top hat rail EN 50022 / 35 x 7.5 mm)

Max. measuring error	± 1.5 %	at 3 K < Δt > 20 K
	± 1 %	at 20 K < Δt > 150 K

1) approved only for heat, no approval for cold
2) no approval
3) can be selected using article number

Dimensional drawings

Calculator unit

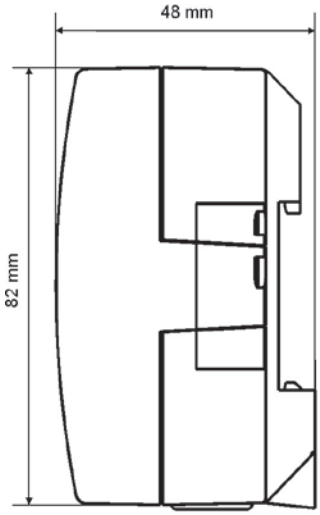

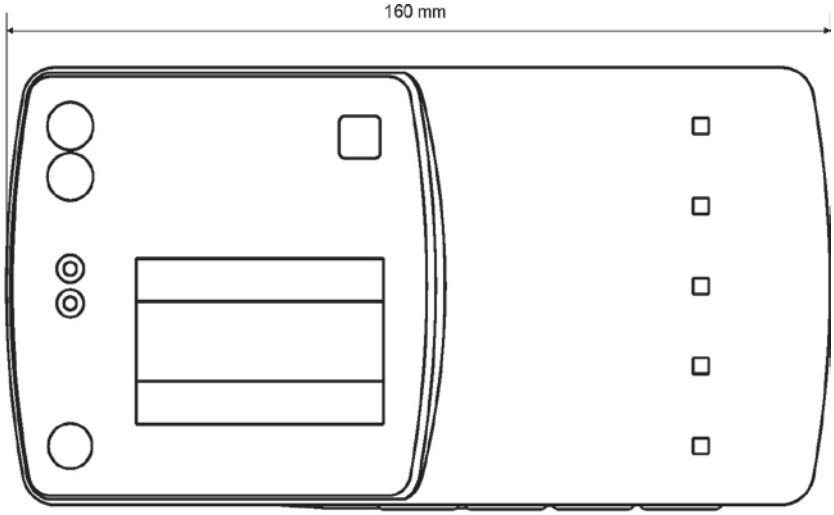

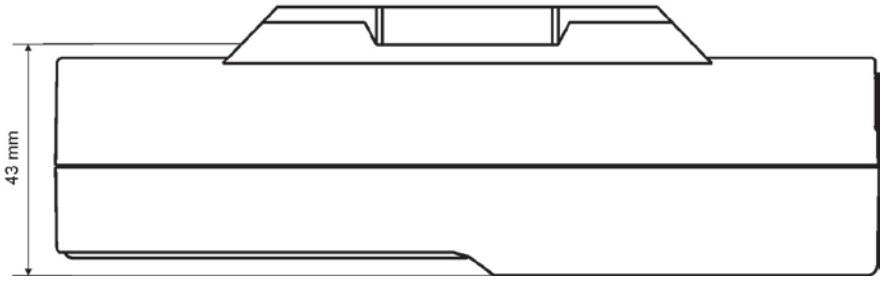

Flow sensors

The dimensions and sizes of the flow sensors in this data sheet are the specifications of the different manufacturers.

Temperature sensor

Measuring resistance (standard)	PT1000 EN 60751
Temperature range	0 - 180 °C
Connection wire cable sensor	3 m (standard)
	10 m (option)

Dimensions	L1	L2	D
short	45 mm	3000 mm	5.2 mm
short	45 mm	10000 mm	5.2 mm
medium	105 mm	3000 mm	6.0 mm
medium	105 mm	10000 mm	6.0 mm
long	140 mm	3000 mm	6.0 mm
long	140 mm	10000 mm	6.0 mm

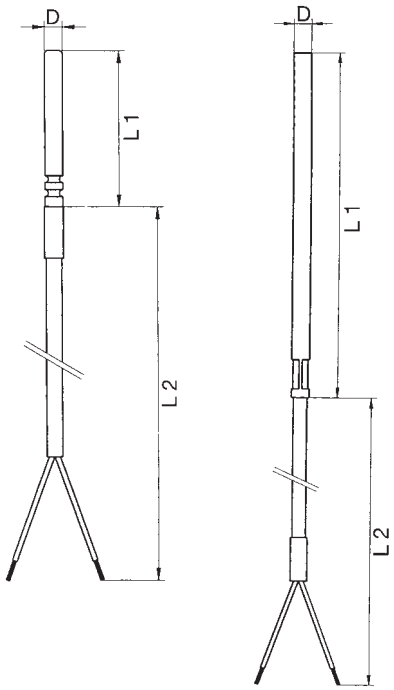

Immersion sleeves

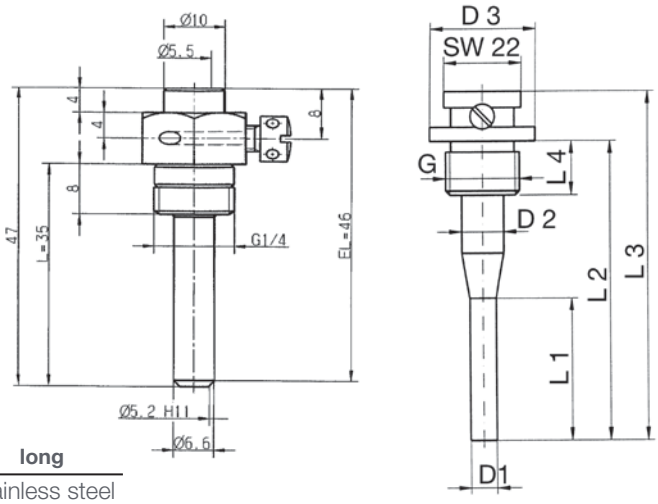

Versions	short	medium	long
Material	Brass	Stainless steel	Stainless steel
Temperature range	0 - 130 °C	0 - 180 °C	0 - 180 °C

Dimensions	L1	L2	L3	L4	D1	D2	D3	G	SW
short	27 mm	35 mm	47 mm	8.0 mm	6.6 mm	6.6 mm		¼"	17 mm
medium	40 mm	85 mm	99 mm	15 mm	7.5 mm	12 mm	30 mm	½"	22 mm
long	40 mm	120 mm	134 mm	15 mm	7.5 mm	12 mm	30 mm	½"	22 mm

Note:
Head-type sensors are available on request. All sensors are paired and calibrated.
In agreement with the MID, immersion sleeves are only approved from qp 6.0 m³/h.

QUNDIS GmbH
Sonnentor 2
D-99098 Erfurt
+49 (0) 361 26 280-0
+49 (0) 361 26 280-175
info@qundis.com
www.qundis.com